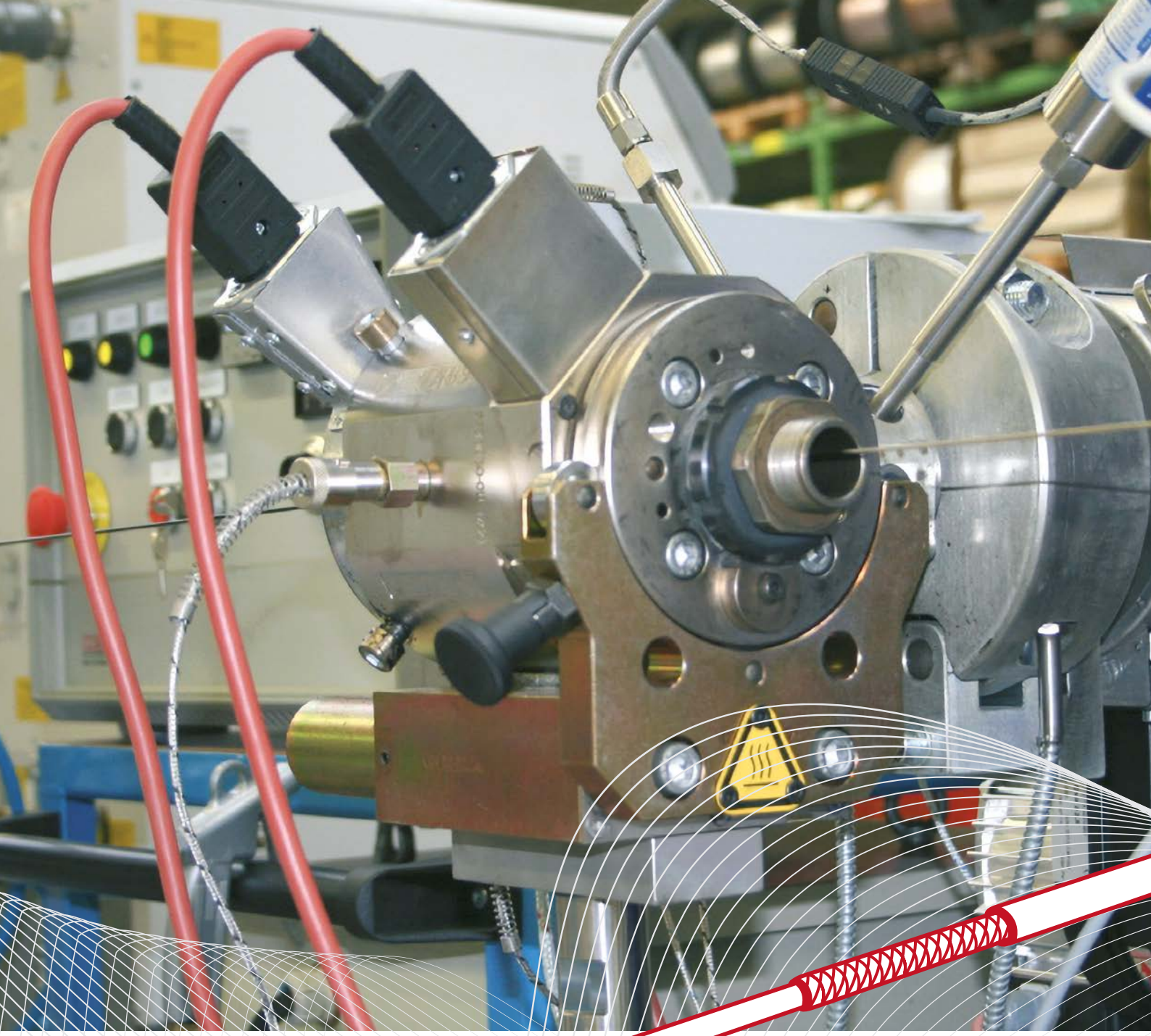

Serial Resistance Heating Cables

eltherm®

Contents

From Process to Product
The eltherm story 4

From A to Z
From a single source 6

Serial
Resistance Heating Cables 8

Application areas
Serial Resistance Heating Cables 10

Selection guide
Serial Resistance Heating Cables 12

Data sheets
Serial Resistance Heating Cables 14

Accessories
Serial Resistance Heating Cable System 28

Sample illustration
Serial Resistance Heating Cables 38

Survey
Concerning Electrical Trace Heating 40

We are there for you
eltherm Worldwide 42

"We understand individual requirements and we always keep the customer-specific benefit in mind."

eltherm in Burbach, Germany

1. Manufacturing I
2. Administration, application engineering
3. Research, development, sales, Academy
4. Manufacturing II

From Process to Product
The eltherm Story

Since it was founded in 1991 in Burbach, Germany, eltherm has developed into a worldwide solution provider with its own production. Today, eltherm is a one-stop shop for electrical trace heating products and systems with the quality label "Made in Germany". The company enjoys worldwide recognition as a turnkey partner for drafting, developing, installing and commissioning electrical trace heating for complex industrial plants and facilities.

Production sites for all types of heating cables and accessories together with technical expertise make eltherm a leading manufacturer of electrical trace heating systems.

In addition to frost protection and temperature maintenance up to 900 °C, eltherm is the expert partner for complete system solutions right up to heating entire chemicals and other industrial plants. The capability and competence of the company are demonstrated in the wide range of different application areas including the oil and gas industry, power plant construction and the building industry as well as the automotive and food industries.

› Portfolio focus
We offer a complete range of products, systems and solutions, from A to Z. Made in Germany. From a single source.

› Customer focus
Concentrating on the benefit for our customers sets us apart. We understand and meet the requirements of our customers with great technical expertise and passion.

› Technology focus
We concentrate exclusively on electrical trace heating. That is our core competence – with no compromises.

› Global focus
We are a worldwide engineering company with our own in-house production. With 270 employees we serve the international markets of 13 locations on 5 continents.

From A to Z
From a single source

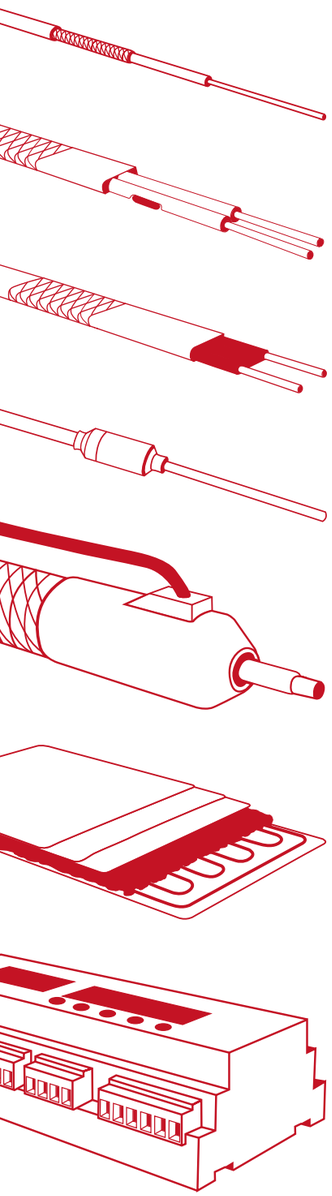

› Serial resistance heating cables
For frost protection and process temperatures in industrial systems.

› Parallel-resistance heating cables
Parallel heating cables with constant meter output and one-sided connection.

› Self-regulating heating cables
For frost protection and temperature maintenance in industry and buildings. Applications up to 250 °C.

› Mineral-insulated heating cables
Manufactured and assembled exclusively from alloy 825 or premium stainless steel. "Clean Laser Seal" technology (CLS) guarantees homogeneous, 100% stable systems that function reliably up to 700 °C.

› Heated analytic cables, pressure and loading hoses
For reliable and safe transport of pressurised or depressurised liquids or gases at up to 450 °C without temperature loss.

› Heating mats and heating sleeves
Customer-specific and tailor-made for reliable heating of valves, pumps, drums, barrels, hob-bocks and flange covers up to 450 °C.

› Measurement and control technology
This includes temperature controllers, display and control units, monitoring and measuring in-struments, regulating accessories and complete switch cabinets.

› Accessories
For safe and effective assembly and operation of complete trace heating systems – From small facilities to large plants.

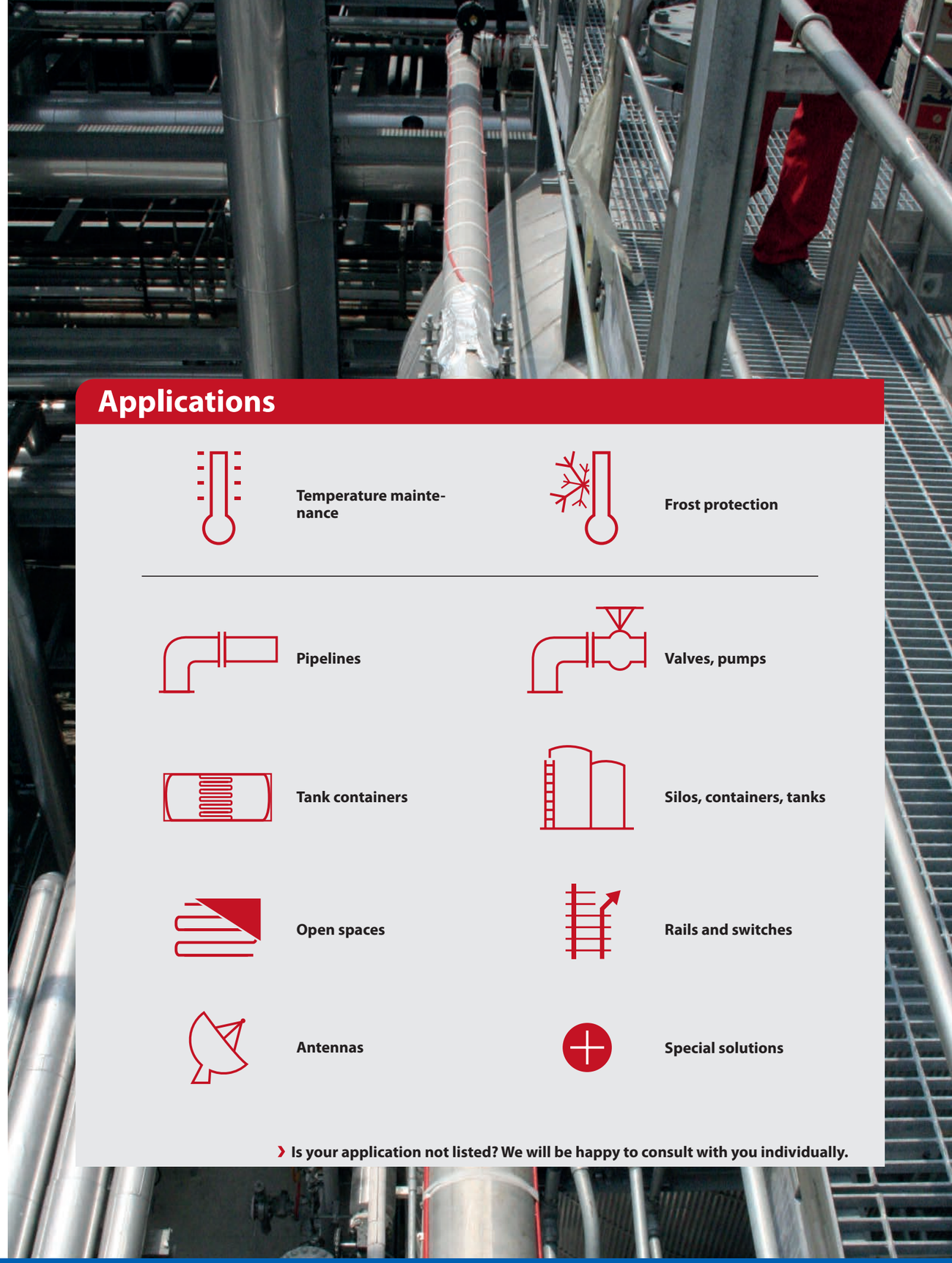

Applications

- Temperature maintenance
- Frost protection
- Pipelines
- Valves, pumps
- Tank containers
- Silos, containers, tanks
- Open spaces
- Rails and switches
- Antennas
- Special solutions

› Is your application not listed? We will be happy to consult with you individually.

+44 (0) 191 410 4292
hpsales@thorneandderrick.co.uk
heatingandprocess.com

At a glance

Advantages

- High level of flexibility
- High temperature resistance
- Small bending radii
- High operating temperatures
- High chemical resistance

Approvals

Serial Resistance Heating Cables

Serial resistance heating cable are available by the metre (ELKM). A constant temperature must be maintained in many applications to sustain the necessary processes and the condition of the heated medium. Serial resistance heating cables can also be used to prevent pipelines, pumps, valves and containers from freezing. Many of our heating cables are also approved for use in areas subject to explosion hazard.

And a little more still? We provide optimal solutions especially at high operating temperatures. High temperature resistance and flexibility are our strength. For your varied applications addressing all aspects of temperature maintenance we offer various designs with and without protective braiding and with fluoropolymer insulation.

Application

Frost protection and temperature maintenance on containers, pipes, valves and filters, etc. The small bending radii of the heating cables allows for dense and wide-area allocation, even with small components. Serial heating cables are also used in our heated analytic cables, pressure and loading hoses and in special heaters.

Checklist

Serial resistance heating cable system

- **A** Heating cable
- **B** Connecting set
- **C** Assembly accessories for pipelines
- **D** Fastenings, self-adhesive tapes and foils
- **E** Insulation bushing
- **F** Warning sign
- **G** Temperature controller
- **H** Temperature tracer

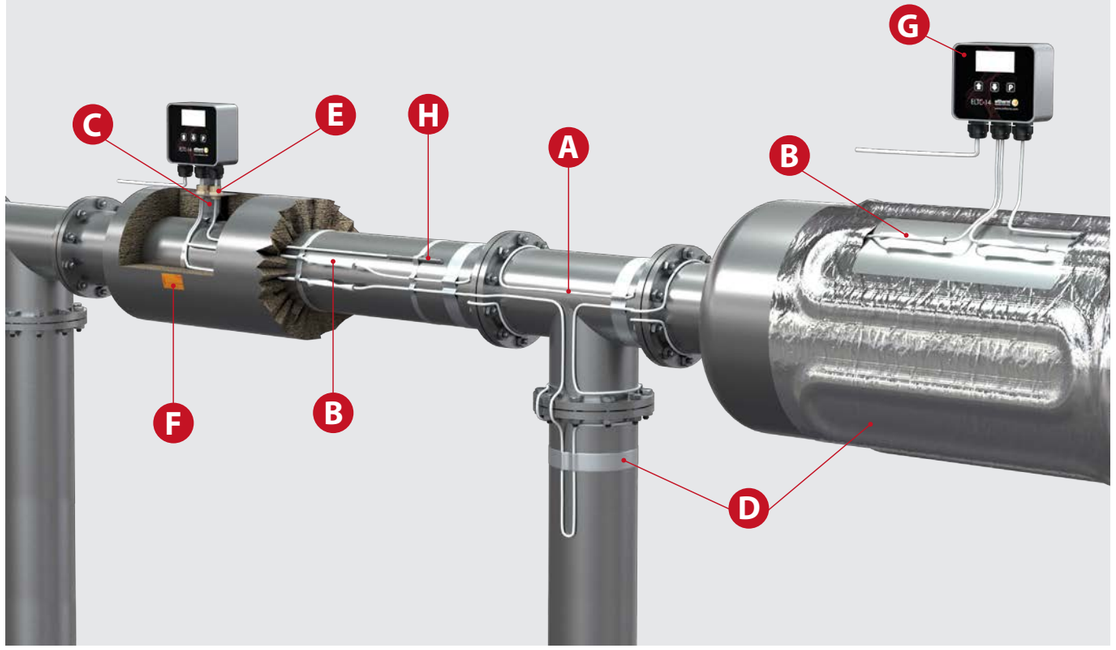

This is simply an overview drawing of sample pipeline heating, not installation instructions. For detailed information please contact our technicians.

eltherm®

Fields of Application
Serial Resistance Heating Cables

- Bottling systems
- Exhaust systems
- Plant engineering
- Antenna heating
- Fittings heating
- Coating systems
- Biotechnology
- Bitumen plants
- Chem. process engineering
- Container heating
- Energy production
- Labelling machines
- Extruders
- Grease transport
- Surface heating
- Augers
- Mould making
- Floor heating
- Cartridge heaters
- Adhesive technology
- Plastics technology
- Laboratory technology
- Food production
- Mechanical engineering
- Medical technology
- Waste incineration plants
- Surface technology
- Organic chemistry
- Parabolic mirror heating
- Presses
- Foaming plants
- Shipbuilding
- Transport technology
- Door frame heating
- Connection technology
- Process engineering
- Loading arms
- Packaging industry
- Heat recovery systems
- and many more

Chemicals and petrochemicals

Food industry

Pharmaceuticals

Energy production

Wastewater technology

Laboratory technology

Satellite antennas

Bitumen plants

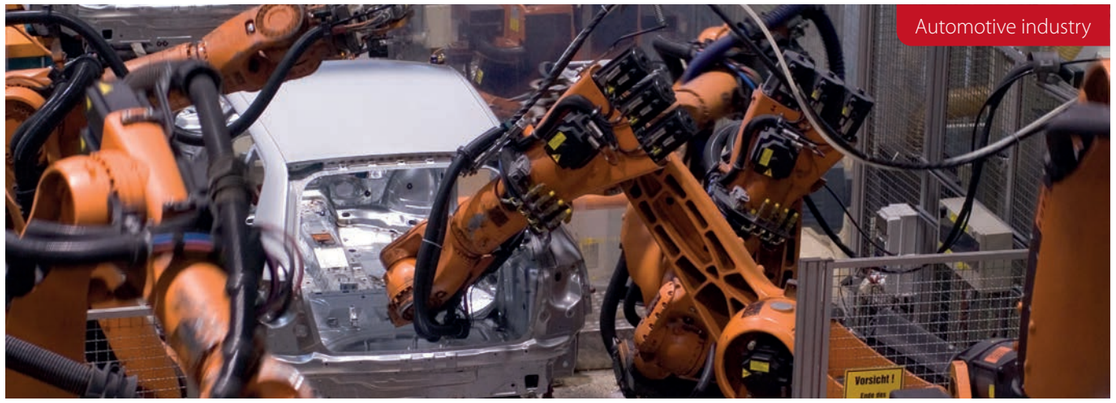
Automotive industry

+44 (0) 191 410 4292
hpsales@thorneandderrick.co.uk
heatingandprocess.com

eltherm®

Selection Guide
Serial Resistance Heating Cables

to 260 °C

Moisture-Resistant

ELKM-A
14

Fields of application:
- Containers, pipes, valves, silos, tanks
- Frost protection, temperature maintenance
- Many industries
- Rotor blades
- Marble tiles

Technical specifications:
- Insulating cover: Fluoropolymer
- Nominal voltage max.: 750 V
- Output, max.: 30 W/m
- Max. operating temperature: 260°C
- Bending radius min.: 2.5 x outer-Ø
- Installation temp. min.: -60°C
- Heating cable configuration: Stranded, coiled from 8000 Ω/km

ELKM-AS
16

Fields of application:
- Containers, pipes, valves, silos, tanks
- Frost protection, temperature maintenance
- Many industries
- Rotor blades
- Marble tiles

Technical specifications:
- Insulating cover: Fluoropolymer
- Protective braiding: Cu nickel plated
- Nominal voltage max.: 750 V
- Output, max.: 30 W/m
- Max. operating temperature: 260°C
- Bending radius min.: 2.5 x outer-Ø
- Installation temp. min.: -60°C
- Heating cable configuration: Stranded, coiled from 8000 Ω/km

ELKM-AE
18

Fields of application:
- Containers, pipes, valves, silos, tanks
- Frost protection, temperature maintenance
- Mould heating
- IBCs
- Antenna heating

Technical specifications:
- Insulating cover: Fluoropolymer
- Protective braiding: VA 1.4401/ SS 316
- Nominal voltage max.: 750 V
- Output, max.: 30 W/m
- Max. operating temperature: 260°C
- Bending radius min.: 2.5 x outer-Ø
- Installation temp. min.: -60°C
- Heating cable configuration: Stranded, coiled from 8000 Ω/km

ELKM-AG
20

Fields of application:
- Frost protection
- Temperature maintenance
- Silos, containers, tanks
- Valves, pumps
- Chemistry, oil and gas industry
- Liquid keeping
- Wastewater facilities
- Tank containers
- IBCs
- Instrumentation, production processes

Technical specifications:
- Insulating cover: Fluoropolymer
- Protective braiding: Cu nickel plated
- Outer jacket: Fluoropolymer
- Nominal voltage max.: 750 V
- Output, max.: 30 W/m
- Max. operating temperature: 250°C
- Bending radius min.: 7.5 mm
- Installation temp. min.: -60°C
- Interference immunity: 7 J

ELKM-AG-E
22

Fields of application:
- Frost protection
- Temperature maintenance
- Silos, containers, tanks
- Valves, pumps
- Filter heating
- Hopper heating
- Automotive
- Paint shops
- Heating mantles
- Devices and systems made of (non-) metallic material

Technical specifications:
- Insulating cover: Fluoropolymer
- Protective braiding: Cu nickel plated
- Outer jacket: Fluoropolymer
- Nominal voltage max.: 750 V
- Output, max.: 30 W/m
- Max. operating temperature: 260°C
- Bending radius min.: 2.5 x outer-Ø
- Installation temp. min.: -60°C
- Interference immunity: 4 J

ELKM-AG-L
24

Fields of application:
- Frost protection
- Temperature maintenance
- Silos, containers, tanks
- Valves, pumps
- Filter heating
- Hopper heating
- Automotive, tank containers
- Parabolic antenna heating
- Automotive
- Devices and systems made of (non-) metallic material

Technical specifications:
- Insulating cover: Fluoropolymer
- Protective braiding: Cu nickel plated
- Outer jacket: Fluoropolymer
- Nominal voltage max.: 750 V
- Output, max.: 30 W/m
- Max. operating temperature: 260°C
- Bending radius min.: 2.5 x outer-Ø
- Installation temp. min.: -60°C
- Heating cable configuration: Stranded or coiled

ELKM-AG-N
26

Fields of application:
- Frost protection
- Temperature maintenance
- Silos, containers, tanks
- Valves, pumps
- Filter heating
- Hopper heating
- Paint shops
- Tank containers
- Automotive
- Devices and systems made of (non-) metallic material

Technical specifications:
- Insulating cover: Fluoropolymer
- Protective braiding: Cu nickel plated
- Outer jacket: Fluoropolymer
- Nominal voltage max.: 550 V
- Output, max.: 30 W/m
- Max. operating temperature: 260°C
- Bending radius min.: 2.5 x outer-Ø
- Installation temp. min.: -60°C
- Interference immunity: 4 J

eltherm®

At a glance

Applications

Frost protection
Temperature maintenance
Silos, containers, tanks
Valves, pumps

- Rotor blades
- Marble tiles
- Devices and systems made of non-metallic material

Advantages

- High level of flexibility
- Small bending radius
- High chemical resistance
- Moisture-resistant

Approvals

- Manufactured in line with DIN VDE 0253

Type ELKM-A
to 260 °C

1	**Heating conductor**	Stranded or coiled
2	**Insulating cover**	Fluoropolymer

Checklist for ELKM-A

Connecting sets		
ELVB22	Connecting set for 1.5 mm² cold cable	0911048
Junction boxes		
ELAK-2	104 x 104 x 70 mm, polycarbonate, IP 66, up to 3 heating cables, Screw connection 1x M25, knockout 7x M20/M25	0920030
Connection cable		
ELKM-A 11.7	Can be used as connection cable 1.5 mm²	0136010

Additional accessories on pages 28 - 36.

Technical Specifications

Max. voltage	750 V
Typical output	30 W/m*
Max. operating temperature	260°C
Min. bending radius	2.5 x external diameter
Min. installation temperature	-60°C
Heating conductor	Stranded, coiled from 8000 Ω/km on request

* The output per metre of heating pipe and the maximum possible operating temperatures depend on the application in question. We recommend that you contact our engineers for specific cases - we will be happy to advise you.

Nominal resistance (Ω/km)	External diameter approx. (mm)	Weight approx. (g/m)	Temperature coefficient (x 10 $^{-3}$ / K)	Item no.
1.95	5.8	112	4.30	0136002
2.90	4.6	73	4.30	0136006
4.40	4.2	54	4.30	0136004
7.20	3.1	33	4.30	0136007
10.00	3.0	31	4.30	0136008
11.70	2.7	30	4.30	0136010
15.00	2.6	19	4.30	0136012
25.00	2.5	17	3.00	0136016
31.50	2.9	23	1.60	0136020
50.00	2.6	17	1.60	0136030
65.00	2.4	14	1.60	0136032
80.00	2.7	20	0.90	0136038
100.00	2.5	17	0.90	0136042
157.00	2.5	17	0.45	0136049
180.00	2.2	12	0.90	0136052
200.00	2.4	14	0.45	0136054
260.00	2.2	12	0.45	0136058

Nominal resistance (Ω/km)	External diameter approx. (mm)	Weight approx. (g/m)	Temperature coefficient (x 10 $^{-3}$ / K)	Item no.
280.00	2.1	10	0.38	0136059
328.00	2.5	16	0.18	0136061
360.00	2.1	10	0.45	0136064
430.00	2.3	13	0.18	0136066
480.00	2.2	12	0.18	0136068
600.00	2.1	10	0.18	0136076
800.00	2.0	9	0.18	0136080
1000.00	2.1	10	0.04	0136082
1470.00	2.1	9	0.04	0136092
1750.00	2.0	8	0.04	0136094
1900.00	2.2	12	0.04	0136096
2900.00	2.1	9	0.04	0136104
4000.00	2.0	8	0.04	0136114
4700.00	1.9	8	0.15	0136118
6000.00	1.9	7	0.20	0136124
7000.00	2.0	7	0.15	0136126
8000.00	2.0	7	0.15	0136128

Weight tolerances due to manufacturing are possible.
Additional resistances up to 1,500,000 Ω/km on request.
Resistance tolerance +/- 5%.

For applications with fixed external diameter, please contact our engineers in advance. When the cables are being laid, they must not touch each other or cross. Fuse protection with FI 30 mA must be provided. Observe standards EN 60079-30-2 and EN 60519-10.

+44 (0) 191 410 4292 hpsales@thorneandderrick.co.uk heatingandprocess.com

eltherm®

At a glance

Applications

Frost protection
Temperature maintenance
Silos, containers, tanks
Valves, pumps

- Rotor blades
- Marble tiles
- Devices and systems made of metallic and non-metallic material

Advantages

- High level of flexibility
- Small bending radius
- High chemical resistance
- Moisture-resistant

Approvals

EAC

- Manufactured in line with DIN VDE 0253

Type ELKM-AS
to 260 °C

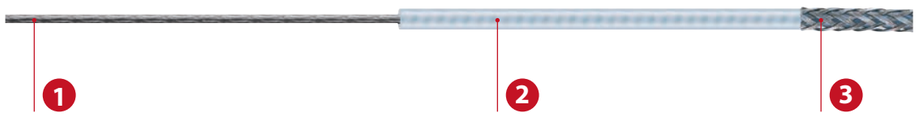

1	**Heating conductor**	Stranded or coiled
2	**Insulating cover**	Fluoropolymer
3	**Protection**	Protective braiding (Cu, nickel-plated)

Checklist for ELKM-AS

Connecting sets		
ELVB26	Connecting set for 1.5 mm² cold cable	0911052
Junction boxes		
ELAK-2	104 x 104 x 70 mm, polycarbonate, IP 66, up to 3 heating cables, Screw connection 1x M25, knockout 7x M20/M25	0920030
Connection cable		
ELKM-AS 11.7	Can be used as connection cable 1.5 mm²	0137010
ELKM-AS 7.2	Can be used as connection cable 2.5 mm²	0137002

› Additional accessories on pages 28 - 36.

Technical Specifications

Max. voltage	750 V
Typical output	30 W/m*
Max. operating temperature	260°C
Min. bending radius	2.5 x external diameter
Min. installation temperature	-60°C
Heating conductor	Stranded, coiled from 8000 Ω/km on request

* The output per metre of heating pipe and the maximum possible operating temperatures depend on the application in question. We recommend that you contact our engineers for specific cases - we will be happy to advise you.

Nominal resistance (Ω/km)	External diameter approx. (mm)	Weight approx. (g/m)	Temperature coefficient (x 10 ⁻³ / K)	Item no.
1.95 (Cu 10 mm²)	7.11	157.0	4.30	0137000
2.90 (Cu 6 mm²)	5.99	104.9	4.30	0137002
4.40 (Cu 4 mm²)	4.73	69.8	4.30	0137004
7.20 (Cu 2.5 mm²)	3.89	48.3	4.30	0137007
10.00	3.62	40.6	4.30	0137009
11.70 (Cu 1.5 mm²)	3.53	37.6	4.30	0137010
15.00	3.20	33.6	4.30	0137012
25.00	3.15	31.1	3.00	0137016
31.50	3.55	38.6	1.60	0137020
50.00	3.15	31.3	1.60	0137030
65.00	3.04	28.6	1.60	0137032
80.00	3.32	34.5	0.90	0137038
100.00	3.11	31.0	0.90	0137042
157.00	3.10	31.2	0.45	0137045
180.00	2.84	25.8	0.90	0137052
200.00	2.98	28.2	0.45	0137054

Weight tolerances due to manufacturing are possible.
Additional resistances up to 1,500,000 Ω/km on request.
Resistance tolerance +/- 5%.

Nominal resistance (Ω/km)	External diameter approx. (mm)	Weight approx. (g/m)	Temperature coefficient (x 10 ⁻³ / K)	Item no.
260.00	2.87	26.3	0.45	0137058
280.00	2.76	24.3	0.38	0137060
328.00	3.13	30.6	0.18	0137061
360.00	2.71	23.7	0.45	0137064
430.00	2.96	27.6	0.18	0137266
480.00	2.94	26.8	0.18	0137069
600.00	2.80	24.9	0.18	0137213
800.00	2.69	23.2	0.18	0137080
1000.00	2.81	24.9	0.04	0137082
1470.00	2.64	22.6	0.04	0137214
1750.00	2.66	22.3	0.04	0137094
1900.00	2.84	25.6	0.40	0137215
2900.00	2.68	23.1	0.40	0137219
4000.00	2.61	21.9	0.40	0137114
4700.00	2.55	21.6	0.15	0137118
6000.00	2.49	20.6	0.20	0137237
7000.00	2.43	19.9	0.15	0137126
8000.00	2.41	19.7	0.15	0137128

For applications with fixed external diameter, please contact our engineers in advance. When the cables are being laid, they must not touch each other or cross. Fuse protection with FI 30 mA must be provided. Observe standards EN 60079-30-2 and EN 60519-10.

eltherm®

At a glance

Applications

Frost protection
Temperature maintenance
Silos, containers, tanks
Valves, pumps

- Mould heating
- Antenna heating
- IBCs
- Devices and systems made of metallic and non-metallic material

Advantages

- High level of flexibility
- Small bending radius
- High chemical resistance
- Moisture-resistant

Approvals

- Manufactured in line with DIN VDE 0253

Type ELKM-AE
to 260 °C

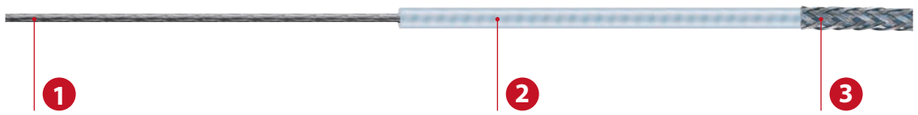

1	**Heating conductor**	Stranded or coiled
2	**Insulating cover**	Fluoropolymer
3	**Protection**	Protective braiding (VA 1.4401 / SS 316)

Checklist for ELKM-AE

Connecting sets		
ELVB26	Connecting set for 1.5 mm² cold cable	0911052
Junction boxes		
ELAK-2	104 x 104 x 70 mm, polycarbonate, IP 66, up to 3 heating cables, Screw connection 1x M25, knockout 7x M20/M25	0920030
Connection cable		
ELKM-AE 11.7	Can be used as connection cable 1.5 mm²	0137011
ELKM-AE 7.2	Can be used as connection cable 2.5 mm²	0137006

› Additional accessories on pages 28 - 36.

Technical Specifications

Max. voltage	750 V
Typical output	30 W/m*
Max. operating temperature	260°C
Min. bending radius	2.5 x external diameter
Min. installation temperature	-60°C
Heating conductor	Stranded, coiled from 8000 Ω/km on request

* The output per metre of heating pipe and the maximum possible operating temperatures depend on the application in question. We recommend that you contact our engineers for specific cases - we will be happy to advise you.

Nominal resistance (Ω/km)	External diameter approx. (mm)	Weight approx. (g/m)	Temperature coefficient (x 10 $^{-3}$ / K)	Item no.
1.95 (Cu 10 mm²)	6.97	130	4.30	0137001
2.90 (Cu 6 mm²)	5.83	100	4.30	0137003
4.40 (Cu 4 mm²)	4.57	70	4.30	0137005
7.20 (Cu 2.5 mm²)	3.73	50	4.30	0137006
10.00	3.46	30	4.30	0137008
11.70 (Cu 1.5 mm²)	3.37	30	4.30	0137011
15.00	3.04	30	4.30	0137013
25.00	2.99	30	3.00	0137017
31.50	3.39	30	1.60	0137021
50.00	2.90	22.2	1.60	0137031
65.00	2.88	19.6	1.60	0137033
80.00	3.16	25.4	0.90	0137039
100.00	2.95	22.0	0.90	0137043
157.00	2.94	22.1	0.45	0137044
180.00	2.68	17.0	0.90	0137053
200.00	2.82	19.3	0.45	0137055

Weight tolerances due to manufacturing are possible.
Additional resistances up to 1,500,000 Ω/km on request.
Resistance tolerance +/- 5%.

Nominal resistance (Ω/km)	External diameter approx. (mm)	Weight approx. (g/m)	Temperature coefficient (x 10 $^{-3}$ / K)	Item no.
260.00	2.71	17.4	0.45	0137059
280.00	2.60	15.6	0.38	0137230
328.00	2.97	21.5	0.18	0137231
360.00	2.55	14.9	0.45	0137065
430.00	2.80	18.7	0.18	0137067
480.00	2.78	17.9	0.18	0137068
600.00	2.64	16.1	0.18	0137232
800.00	2.53	14.5	0.18	0137081
1000.00	2.65	16.2	0.04	0137083
1470.00	2.48	13.9	0.04	0137233
1750.00	2.50	13.6	0.04	0137234
1900.00	2.68	11.6	0.40	0137235
2900.00	2.52	14.4	0.40	0137104
4000.00	2.45	13.3	0.40	0137115
4700.00	2.39	12.6	0.15	0137119
6000.00	2.33	12.0	0.20	0137236
7000.00	2.27	11.4	0.15	0137127
8000.00	2.25	11.1	0.15	0137121

For applications with fixed external diameter, please contact our engineers in advance. When the cables are being laid, they must not touch each other or cross. Fuse protection with FI 30 mA must be provided. Observe standards EN 60079-30-2 and EN 60519-10.

eltherm®

At a glance

Applications

Frost protection | Temperature maintenance

Silos, containers, tanks | Valves, pumps

- Chemistry
- Oil and gas industry
- Liquid keeping
- Tank containers
- IBCs
- Wastewater facilities
- Instrumentation
- Production processes
- Devices and systems made of metallic and non-metallic material

Advantages

- Maximum chemical and mechanical resistance
- High holding temperatures
- Easy to lay, even in complex structural shapes
- Simple connection technology
- Large selection of-resistances
- Longer heating circuits
- Moisture-resistant

Approvals

- Device class
  III 2G Ex 60079-30-1 IIC Gb
  II 2D Ex 60079-30-1 IIIC Db
- Certificate
  FM16ATEX0037X

Type ELKM-AG
to 250 °C

1	**Heating conductor**	Stranded
2	**Insulating cover**	Fluoropolymer
3	**Protection**	Protective braiding (Cu, nickel-plated)
4	**Outer jacket**	Fluoropolymer

Checklist for ELKM-AG

Connecting sets		
ELVB-AG	Connecting set, shrink-fit technology, for 1.5 mm² cold cable	0X81150
Junction boxes		
ELAK-Ex-4.11	122 x 120 x 90 mm, polyester, IP66, 1 heating cable, 1 supply line	0X85411
ELAK-Ex-4.12	122 x 120 x 90 mm, polyester, IP66, 2 heating cables, 1 supply line	0X85412
ELAK-Ex-4.13	122 x 120 x 90 mm, polyester, IP66, 3 heating cables, 1 supply line	0X85413
ELAK-Ex-R1	Ø 150 mm, height 125 mm, polyamide, for star point, Ex e	0X80071
Connection cables		
ELKM-AG 11.7	Can be used as connection cable 1.5 mm²	01GA011E
ELKM-AG-N 7.2	Can be used as connection cable 2.5mm²	01TA007E
ELKM-AG-N 11.7	Can be used as connection cable 1.5mm²	01TA011E

› Additional accessories on pages 28 - 36.

Technical Specifications

Max. voltage	750 V
Typical output	30 W/m*
Max. operating temperature	250°C
Min. bending radius	7.5 mm
Min. installation temperature	– 60 °C
Heating conductor	Stranded
Interference immunity	7 J

* The output per metre of heating pipe and the maximum possible operating temperatures depend on the application in question. We recommend that you contact our engineers for specific cases, or use our design software eltherm designer.

Nominal resistance (Ω/km)	External diameter approx. (mm)	Weight approx. (g/m)	Temperature coefficient (x 10 $^{-3}$ / K)	Item no.
11.7	5.1	72	4.30	01GA011E
50	4.6	66	1.60	01GA050E
65	4.7	61	1.60	01GA065E
80	5.1	69	0.90	01GA080E
100	4.9	65	0.90	01GA110E
157	4.9	64	0.45	01GA115E
180	4.9	56	0.90	01GA118E
200	4.6	61	0.45	01GA120E
260	4.7	57	0.45	01GA126E
280	4.6	55	0.38	01GA128E
340	4.5	54	0.45	01GA134E
360	4.4	43	0.45	01GA136E
430	4.4	61	0.45	01GA143E

Manufacturing-dependent tolerances for resistances +/- 5%.

Nominal resistance (Ω/km)	External diameter approx. (mm)	Weight approx. (g/m)	Temperature coefficient (x 10 $^{-3}$ / K)	Item no.
480	4.7	58	0.18	01GA148E
600	4.5	56	0.18	01GA160E
800	4.4	54	0.18	01GA180E
1000	4.5	56	0.04	01GA210E
1470	4.4	53	0.04	01GA214E
1750	4.4	53	0.04	01GA217E
1900	4.6	57	0.40	01GA219E
2900	4.4	54	0.40	01GA229E
4000	4.3	51	0.40	01GA240E
4700	4.2	50	0.15	01GA247E
6000	4.2	49	0.20	01GA260E
7000	4.2	48	0.15	01GA270E
8000	4.1	47	0.15	01GA280E

For applications with fixed external diameter, please contact our engineers in advance. When the cables are being laid, they must not touch each other or cross. Fuse protection with FI 30 mA must be provided.

eltherm®

At a glance

Applications

Frost protection
Temperature maintenance
Silos, containers, tanks
Valves, pumps

- Filter heating
- Hopper heating
- Heating mantles
- Automotive
- Paint shops
- Devices and systems made of metallic and non-metallic material

Advantages

- High chemical and mechanical resistance
- Can be used in all industrial areas
- High operating temperature
- Easy to lay, even in complex structural shapes
- High level of flexibility
- Resistant to steam purging
- Moisture-resistant

Approvals

- Manufactured to EN 60079-30-1:2017
- Device class
  III 2G Ex 60079-30-1 IIC Gb
  II 2D Ex 60079-30-1 IIIC Db
- Certificate
  EPS19ATEX1146U

Type ELKM-AG-E
to 260 °C

1	**Heating conductor**	Stranded or coiled
2	**Insulating cover**	Fluoropolymer
3	**Protection**	Protective braiding (Cu, nickel-plated)
4	**Outer jacket**	Fluoropolymer

Checklist for ELKM-AG-E

Connecting sets

Ex-Con-22/4 Si	Connecting sleeve, for up to 2.5 mm², 4 J, Ex e	0X81140
Ex-Con-36/4	Connecting sleeve, for 2.5 to 35 mm², 4 J, Ex e	0X81120

Junction boxes

ELAK-Ex-4.11	122 x 120 x 90 mm, polyester, IP66, 1 heating cable, 1 supply line	0X85411
ELAK-Ex-4.12	122 x 120 x 90 mm, polyester, IP66, 2 heating cables, 1 supply line	0X85412
ELAK-Ex-4.13	122 x 120 x 90 mm, polyester, IP66, 3 heating cables, 1 supply line	0X85413
ELAK-Ex-R1	Ø 150 mm, height 125 mm, polyamide, for star point, Ex e	0X80071

Connection cables

ELKM-AG 11.7	Can be used as connection cable 1.5 mm² 7 joules	01GA011E
ELKM-AG-N 7.2	Can be used as connection cable 2.5 mm² 4 joules	01TA007E
ELKM-AG-N 11.7	Can be used as connection cable 1.5 mm² 4 joules	01TA011E

Additional accessories on pages 28 - 36.

Technical Specifications

Max. voltage	750 V
Typical output	30 W/m*
Max. operating temperature	260°C
Min. bending radius	2.5 x external diameter
Min. installation temperature	– 60 °C
Heating conductor	Stranded or coiled
Interference immunity	4 J

* The output per metre of heating pipe and the maximum possible operating temperatures depend on the application in question. We recommend that you contact our engineers for specific cases, or use our design software eltherm designer.

Nominal resistance (Ω/km)	Heating cable configuration	Outer diameter approx. (mm)	Weight approx. (g/m)	Temperature-coefficient (x 10 -3 / K)	Item no.
4.40 (Cu 4 mm²)	Stranded	5.7	83	4.30	01AA004E
7.20 (Cu 2.5 mm²)	Stranded	4.7	64	4.30	01AA007E
10.00	Stranded	4.4	50	4.30	01AA010E
11.70 (Cu 1.5 mm²)	Stranded	4.3	52	4.30	01AA011E
15.00	Stranded	4.1	48	4.30	01AA015E
25.00	Stranded	4.0	44	3.00	01AA025E
31.50	Stranded	4.3	54	1.60	01AA031E
50.00	Stranded	4.0	46	1.60	01AA050E
65.00	Stranded	3.8	42	1.60	01AA065E
80.00	Stranded	4.1	50	0.90	01AA080E
100.00	Stranded	4.0	46	0.90	01AA110E
157.00	Stranded	4.0	45	0.45	01AA115E
180.00	Stranded	3.7	39	0.90	01AA118E
200.00	Stranded	3.8	42	0.45	01AA120E
260.00	Stranded	3.7	40	0.45	01AA126E
280.00	Stranded	3.6	36	0.38	01AA128E
328.00	Stranded	3.7	45	0.45	01AA132E
360.00	Stranded	3.5	36	0.45	01AA136E
430.00	Stranded	3.7	41	0.18	01AA143E
480.00	Stranded	3.7	40	0.18	01AA148E
600.00	Stranded	3.6	38	0.18	01AA160E
800.00	Stranded	3.5	35	0.18	01AA180E
1000.00	Stranded	3.6	38	0.04	01AA210E
1470.00	Stranded	3.4	35	0.04	01AA214E
1750.00	Stranded	3.4	33	0.04	01AA217E
1900.00	Stranded	3.1	39	0.40	01AA219E
2900.00	Stranded	3.5	35	0.40	01AA229E
4000.00	Stranded	3.4	33	0.40	01AA240E
4700.00	Stranded	3.4	32	0.15	01AA247E
6000.00	Stranded	3.4	32	0.20	01AA260E
7000.00	Stranded	3.4	32	0.15	01AA270E
8000.00	Stranded	3.4	31	0.15	01AA280E

Nominal resistance (Ω/km)	Heating cable configuration	Outer diameter approx. (mm)	Weight approx. (g/m)	Temperature-coefficient (x 10 -3 / K)	Item no.
9,000	Coiled	4.5	42	0.18	01AA290E
11000	Coiled	4.5	41	0.18	01AA411E
13000	Coiled	4.5	42	0.0001	01AA413E
15000	Coiled	4.5	41	0.0001	01AA415E
20000	Coiled	4.5	41	0.0001	01AA420E
25000	Coiled	4.5	41	0.0001	01AA425E
30000	Coiled	4.5	42	0.0001	01AA430E
40000	Coiled	4.5	41	0.0001	01AA440E
50000	Coiled	4.5	41	0.0001	01AA450E
60000	Coiled	4.5	41	0.0001	01AA460E
80000	Coiled	4.5	41	0.0001	01AA480E
100000	Coiled	4.5	41	0.06	01AA510E
117000	Coiled	4.5	42	0.29	01AA511E
160000	Coiled	4.5	41	0.29	01AA516E
200000	Coiled	4.5	41	0.06	01AA520E
300000	Coiled	4.5	41	0.06	01AA530E
450000	Coiled	4.5	41	0.06	01AA545E
600000	Coiled	4.5	41	0.06	01AA560E
1500000	Coiled	4.5	41	0.08	01AA615E

Weight tolerances due to manufacturing are possible. Resistance tolerance +/- 5%.

For applications with fixed external diameter, please contact our engineers in advance.
When the cables are being laid, they must not touch each other or cross. Fuse protection with FI 30 mA must be provided. Observe standards EN 60079-30-2 and EN 60519-10.

+44 (0) 191 410 4292 hpsales@thorneandderrick.co.uk heatingandprocess.com

eltherm®

At a glance

Applications

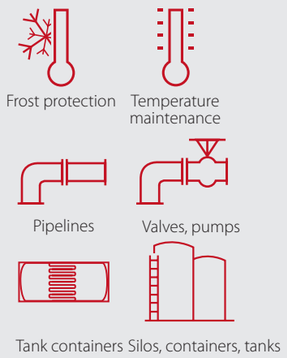

- Filter heating
- Hopper heating
- Parabolic antenna heating
- Automotive
- Devices and systems made of metallic and non-metallic material

Advantages

- Light design
- High chemical and mechanical resistance
- High operating temperature
- Moisture-resistant
- High level of flexibility
- Resistant to steam purging

Approvals

Type ELKM-AG-L
to 260 °C

1	**Heating conductor**	Stranded or coiled
2	**Insulating cover**	Fluoropolymer
3	**Protective conductor**	Cu nickel plated
4	**Outer jacket**	Fluoropolymer

Checklist for ELKM-AG-L

Connecting sets

ELVB30	Connecting set for 1.5 mm² cold cable	0911056
ELVB30-1A	Connecting set for 2.5 to 6 mm² cold cable	0911059

Junction boxes

ELAK-2	104 x 104 x 70 mm, polycarbonate, IP 66, up to 3 heating cables, Screw connection 1x M25, knockout 7x M20/M25	0920030
ELAK-5	122 x 120 x 90 mm, polyester, IP 66, up to 2 heating cables, Screw connection 3x M25	0920013
ELAK-R-1	Ø 150 mm, height 125 mm, thermoplastic, for star point	0920051
ELAK-R-2	150 mm, height 125 mm, thermoplastic	0920052

Connection cables

ELKM-AG-L 11.7	Can be used as connection cable 1.5 mm²	01TT011E
ELKM-AG-L 7.2	Can be used as connection cable 2.5 mm²	01TT007E

› Additional accessories on pages 28 - 36.

Technical Specifications

Max. voltage	750 V
Typical output	30 W/m*
Max. operating temperature	260°C
Min. bending radius	2.5 x external diameter
Min. installation temperature	-60°C
Heating conductor	Stranded or coiled

* The output per metre of heating pipe and the maximum possible operating temperatures depend on the application in question. We recommend that you contact our engineers for specific cases, or use our design software eltherm designer.

Nominal resistance (Ω/km)	External diameter approx. (mm)	Weight approx. (g/m)	Temperature coefficient (x 10 ⁻³ / K)	Item no.
1.95 (Cu 10 mm²)	7.7	156	4.30	01TT002E
2.90 (Cu 6 mm²)	6.4	110	4.30	01TT003E
4.40 (Cu 4 mm²)	5.6	85	4.30	01TT004E
7.20 (Cu 2.5 mm²)	4.5	53	4.30	01TT007E
10.00	4.2	51	4.30	01TT010E
11.70 (Cu 1.5 mm²)	4.1	48	4.30	01TT011E
15.00	3.9	44	4.30	01TT015E
25.00	3.8	43	3.00	01TT025E
31.50	4.1	45	1.60	01TT031E
50.00	3.8	43	1.60	01TT050E
65.00	3.6	42	1.60	01TT065E
80.00	3.9	55	0.90	01TT080E
100.00	3.8	53	0.90	01TT110E
157.00	3.8	40	0.45	01TT115E
180.00	3.5	38	0.90	01TT118E
200.00	3.6	39	0.45	01TT120E
260.00	3.5	38	0.45	01TT126E

Nominal resistance (Ω/km)	External diameter approx. (mm)	Weight approx. (g/m)	Temperature coefficient (x 10 ⁻³ / K)	Item no.
280.00	3.4	35	0.38	01TT128E
328.00	3.78	35.2	0.45	01TT132E
360.00	3.3	33	0.45	01TT136E
430.00	3.5	38	0.18	01TT143E
480.00	3.5	39	0.18	01TT148E
600.00	3.4	35	0.18	01TT160E
800.00	3.3	34	0.18	01TT180E
1000.00	3.4	35	0.04	01TT210E
1470.00	3.2	40	0.04	01TT214E
1750.00	3.2	38	0.04	01TT217E
1900.00	3.5	39	0.40	01TT219E
2900.00	3.3	32	0.40	01TT229E
4000.00	3.2	31	0.40	01TT240E
4700.00	3.2	31	0.15	01TT247E
6000.00	3.2	38	0.20	01TT260E
7000.00	3.2	36	0.15	01TT270E
8000.00	3.2	33	0.15	01TT280E

Weight tolerances due to manufacturing are possible.
Additional resistances up to 1,500,000 Ω/km on request.
Resistance tolerance +/- 5%.

For applications with fixed external diameter, please contact our engineers in advance. When the cables are being laid, they must not touch each other or cross. Fuse protection with FI 30 mA must be provided. Observe standards EN 60079-30-2 and EN 60519-10.

eltherm®

At a glance

Applications

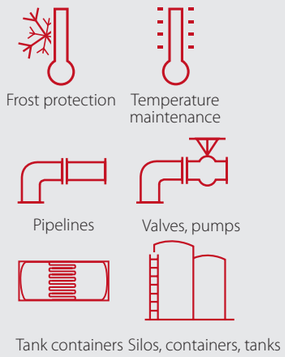

- Filter heating
- Hopper heating
- Automotive
- Paint shops
- Devices and systems made of metallic and non-metallic material

Advantages

- High chemical and mechanical resistance
- High operating temperature
- Moisture-resistant
- High level of flexibility
- Resistant to steam purging

Approvals

- System device class
  II 2G Ex 60079-30-1 IIC Gb
  II 2D Ex 60079-30-1 IIIC Db
- Certificate
  EPS12ATEX1466U

Type ELKM-AG-N
to 260 °C

1	**Heating conductor**	Stranded
2	**Insulating cover**	Fluoropolymer
3	**Protective conductor**	Cu nickel plated
4	**Outer jacket**	Fluoropolymer

Checklist for ELKM-AG-N

Connecting sets		
Ex-Con-25/7	Connecting/terminating set, adhesive technology, 2 screw connections M20 x 1.5	0X81115
Ex-Con-22/4 Si	Connecting sleeve, for up to 2.5 mm², 4 J, Ex e	0X81140
Ex-Con-36/4	Connecting sleeve, for 2.5 to 35 mm², 4 J, Ex e	0X81120
ELVB30	Connecting set for 1.5 mm² cold cable	0911056
ELVB30-1A	Connecting set for 2.5 to 6 mm² cold cable	0911059
Junction boxes		
ELAK-Ex-4.11	122 x 120 x 90 mm, polyester, IP66, 1 heating cable, 1 supply line	0X85411
ELAK-Ex-4.12	122 x 120 x 90 mm, polyester, IP66, 2 heating cables, 1 supply line	0X85412
ELAK-Ex-4.13	122 x 120 x 90 mm, polyester, IP66, 3 heating cables, 1 supply line	0X85413
ELAK-R-1	Ø 150 mm, height 125 mm, thermoplastic, for star point	0920051
Connection cables		
ELKM-AG 11.7	Can be used as connection cable 1.5 mm² 7 joules	01GA011E
ELKM-AG-N 7.2	Can be used as connection cable 2.5 mm² 4 joules	01TA007E
ELKM-AG-N 11.7	Can be used as connection cable 1.5mm² 4 joules	01TA011E

Technical Specifications

Max. voltage	550 V
Typical output	30 W/m*
Max. operating temperature	260°C
Min. bending radius	2.5 x external diameter
Min. installation temperature	-60°C
Heating conductor	Stranded
Interference immunity	4 J

* The output per metre of heating pipe and the maximum possible operating temperatures depend on the application in question. We recommend that you contact our engineers for specific cases, or use our design software eltherm designer.

Nominal resistance (Ω/km)	External diameter approx. (mm)	Weight approx. (g/m)	Temperature coefficient (x 10⁻³ / K)	Item no.
1.95 (Cu 10 mm²)	8.1	166	4.30	01TA002E
2.90 (Cu 6 mm²)	6.8	119	4.30	01TA003E
4.40 (Cu 4 mm²)	6.1	96	4.30	01TA004E
7.20 (Cu 2.5 mm²)	5.1	64	4.30	01TA007E
10.00	4.8	59	4.30	01TA010E
11.70 (Cu 1.5 mm²)	4.7	57	4.30	01TA011E
15.00	4.5	50	4.30	01TA015E
25.00	4.4	48	3.00	01TA025E
31.50	4.7	56	1.60	01TA031E
50.00	4.4	49	1.60	01TA050E
65.00	4.2	46	1.60	01TA065E
80.00	4.5	42	0.90	01TA080E
100.00	4.4	50	0.90	01TA110E
157.00	4.4	46	0.45	01TA115E
180.00	4.1	42	0.90	01TA118E
200.00	4.2	38	0.45	01TA120E
260.00	4.1	42	0.45	01TA126E

Nominal resistance (Ω/km)	External diameter approx. (mm)	Weight approx. (g/m)	Temperature coefficient (x 10⁻³ / K)	Item no.
280.00	4.0	39	0.38	01TA128E
328.00	4.1	40.1	0.45	01TA132E
360.00	3.9	40	0.45	01TA136E
430.00	4.1	43	0.18	01TA143E
480.00	4.1	44	0.18	01TA148E
600.00	4.0	40	0.18	01TA160E
800.00	3.9	41	0.18	01TA180E
1000.00	4.0	43	0.04	01TA210E
1470.00	3.8	40	0.04	01TA214E
1750.00	3.8	37	0.04	01TA217E
1900.00	3.5	41	0.40	01TA219E
2900.00	3.9	41	0.40	01TA229E
4000.00	3.8	37	0.40	01TA240E
4700.00	3.8	35	0.15	01TA247E
6000.00	3.8	34	0.20	01TA260E
7000.00	3.8	33	0.15	01TA270E
8000.00	3.8	36	0.15	01TA280E

Weight tolerances due to manufacturing are possible.
Resistance tolerance +/- 5%.

For applications with fixed external diameter, please contact our engineers in advance. When the cables are being laid, they must not touch each other or cross. Fuse protection with FI 30 mA must be provided. Observe standards EN 60079-30-2 and EN 60519-10.

Accessories
Serial Resistance Heating Cable System

B* – Connecting Sets

	Type	Suitable for	Ex	Description	Item no.
	Ex-Con-22/4 Si	**ELKM-AG-E, -AG-N**	●	Connecting sleeve, for up to 2.5 mm², 4 J, Ex e	0X81140
	Ex-Con-25/7	**ELKM-AG-N**	●	Connecting/terminating set, adhesive technology, 2 screw connections M20 x 1.5	0X81115
	Ex-Con-36/4	**ELKM-AG-E, -AG-N**	●	Connecting sleeve, for 2.5 to 35 mm², 4 J, Ex e	0X81120
	ELVB22	**ELKM-A**		Connecting set for 1.5 mm² cold cable	0911048
	ELVB26	**ELKM-AS , -AE,**		Connecting set for 1.5 mm² cold cable	0911052
	ELVB30	**ELKM-AG-L, -AG-N**		Connecting set for 1.5 mm² cold cable	0911056
	ELVB30-1A			Connecting set for 2.5 to 6 mm² cold cable	0911059
	ELVB-AG-Ex	**ELKM-AG**	●	Connecting set, shrink-fit technology, for 1.5 mm² cold cable	0X81150

C* – Assembly Accessories for Pipelines

	Type	Suitable for	Ex	Description	Item no.
	ELB-13V1	**All**	●	Thread strapping tape, 11 mm, 30 m, Mat. 1.4301	2723001010
	ELB-13V2	**All**	●	Turnbuckle 1.4301 (VE = 10 pieces), Mat. 1.4301	0930042
	ELB-15.04	**All**	●	Hose clamp, 25 - 40 mm, Mat. 1.4301	2723001025
	ELB-15.09	**All**	●	Hose clamp 40-90 mm (DN 25-65), Mat. 1.4301	2723040090
	ELB-15.11	**All**	●	Hose clamp, 50 - 110 mm, Mat. 1.4301	2723050110
	ELB-15,288	**All**	●	Hose clamp, 60 - 288 mm, Mat. 1.4301	2723060288
	ELB-15,650	**All**	●	Hose clamp, 60 - 650 mm, Mat. 1.4301	2723060650
	ELMW-6	**ELAK-2**	●	Mounting bracket 85 x 85 mm, Mat. 1.4301	0941006
	ELMW-Ex-Box	**Ex-Box REG / Ex-Box-LIM**	●	Mounting bracket 185 x 185 mm, Mat. 1.4301	0941072
	ELMW-CT	**EL-CT...**	●	Mounting bracket, mat. 1.4301	0941025
	ELMW-GP1	**ELT-GP 1**	●	Mounting bracket 175 x 125 mm, Mat. 1.4301	0941020
	EL-VSB 300	**All**	●	Variable mounting bracket Adjustable height from 180 to 300 mm, mat. 1.4301	0941085
	EL-VSB 400	**All**	●	Variable mounting bracket Adjustable height from 280 to 400 mm, mat. 1.4301	0941086
	EL-VSBG 300	**ELAK-Ex-9.xx**	●	Variable mounting brackets Adjustable height from 180 to 300 mm, mat. 1.4301	0941084

Accessories
Serial Resistance Heating Cable System

D*– Fastenings, Self-Adhesive Tapes and Foils

	Type	Suitable for	Ex	Description	Max. operating temperature	Item no.
	ELGG-02	All		Glass fabric tape, 50 mm wide, Roll 100 m	+350°C	2416090500
	ELGG-04	All		Glass fabric tape, 70 mm wide, Roll 100 m	+800°C	2416090700
	ELB-02A	All	●	Fibreglass adhesive tape 30 m x 12 mm	+180°C	2486800126
	ELB-02B	All	●	Fibreglass adhesive tape 50 m x 12 mm	+180°C	2486800130
	ELB-06	All	●	Alum. foil, 50 m x 75 mm, self-adhesive	-40°C up to +140°C	0942200
	ELB-06D	All	●	Alum. foil, 100 m x 75 mm, self-adhesive	-40°C up to +140°C	2701900076
	ELB-06C	All	●	Alum. foil, 50 m x 50 mm, with reinforced grid, -40 ... +80°C	-40°C up to +130°C	2701900051
	ELB-06E	All	●	Alum. foil, 50 m x 536 mm, self-adhesive	+150°C	2701900500
	ELB-16.10	All	●	Plastic straps, Length = 102 x 2.5 mm, black, UV-resistant, VE = 100 pc.	+85°C	2796000001
	ELB-16.20	All	●	Plastic straps, Length = 200 x 3.6 mm, black, UV-resistant, VE = 100 pc.	+85°C	2796000002
	ELB-16.36	All	●	Plastic straps, Length = 360 x 4.8 mm, black, UV-resistant, VE = 100 pc.	+85°C	2796000003

E* – Insulation Bushings

	Type	Suitable for	Ex	Description	Item no.
	ELISD-1.12	All temperature tracers	●	Cover plate aluminium, 70 x 70 mm, Ø seal area 3.5 to 7 mm, 2 x M12 x 1.5	0921011
	ELISD-1.16	All temperature tracers	●	Cover plate aluminium, 70 x 70 mm, Ø seal area 4.5 to 10 mm, 1 x M16	0921015
	ELISD-1.20	All connection lines	●	Cover plate aluminium, 70 x 70 mm, Ø seal area 7 to 13 mm, 1 x M20	0921019
	ELISD-1.25	All connection lines	●	Cover plate aluminium, 70 x 70 mm, Ø seal area 9 to 17 mm, 1 x M25	0921023
	ELISD-2.12	For connection cables only	●	Cover plate aluminium, 100 x 40 mm, Ø seal area 3.5 to 7 mm, 2 x M12 x 1.5	0921069
	ELISD-2.16	For connection cables only	●	Cover plate aluminium, 100 x 40 mm, Ø seal area 4.5 to 10 mm, 2 x M16 x 1.5	0921071
	ELISD-3.12	For connection cables only	●	Cover plate aluminium, 100 x 40 mm, Ø seal area 3.5 to 7 mm, 3 x M12 x 1.5	0921067
	ELISD-3.16	For connection cables only	●	Cover plate aluminium, 100 x 40 mm, Ø seal area 4.5 to 10 mm, 3 x M16 x 1.5	0921070

F* – Warning Signs

	Type	Suitable for	Ex	Description	Item no.
	EL-WS01D	All	●	German "Elektrische Begleitheizung"	2986900002
	EL-WS01E	All	●	English "Electric Heat Tracing"	2986900012
	EL-WS01F	All	●	French„ "Traçage Electrique"	2986900032
	EL-WS01R	All	●	Russian "Электрообогрев"	2986900013
	EL-WS01I	All	●	Italian "Tracciatura elettrica riscaldante"	2986900089

Accessories
Serial Resistance Heating Cable System

G* – Temperature Controllers

	Type	Suitable for	Ex	Description	Ambient temperature	Item no.
	ELTC-14	All		Electronic temperature controller with display	-25°C up to +55°C	0620000
	ELTC-15	All		Electronic temperature controller with display and ramp function	-25 °C to + 55 °C	0621500
	ELTC-21	All		Electronic temperature controller with display for top hat rail-mounting	-25 °C to + 55 °C	0610093
	ELTC-MV2	All		Electronic temperature controller Moduvise, Top-hat rail	-25 °C to + 55 °C	0611135
	Ex-Box REG/DIS	All	●	Electronic temperature controller with display	-32 °C to + 60 °C	0X60020
	Ex-Box REG/LED	All	●	Electronic temperature controller with LED	-32 °C to + 60 °C	0X60021
	Ex-Box LIM/LED	All	●	Electronic limiter with LED	-32 °C to + 60 °C	0X60023
	Ex-Box LIM/DIS	All	●	Electronic limiter with display	-32 °C to + 60°C	0X60024
	Ex-Control	Ex-box	●	Hand-held operating device for Ex-box RED/ LED and LMI/LED	-32 °C to + 60°C	0X60026
	Ex-TC/A-It	All	●	Electronic temperature controller with alarm function, pipeline mounting	-20°C up to +50°C	0X60101
	Ex-TC/A-W	All	●	Electronic temperature controller with alarm function, wall mounting	-45°C up to +50°C	0X60103
	Ex-TC/AL-It	All	●	Electronic temperature controller and limiter with alarm function and pipeline mounting	-20 °C up to +50 °C	0X60121
	Ex-TC/AL-W	All	●	Electronic temperature controller and limiter with alarm function and wall mounting	-45 °C up to +50 °C	0X60123
	Ex-TC/M-It	All	●	Electronic temperature controller with Modbus, pipeline mounting	-20 °C up to +50 °C	0X60131
	Ex-TC/M-W	All	●	Electronic temperature controller with Modbus, wall mounting	-45 °C up to +50 °C	0X60133

H* – Temperature Tracers

	Type	Suitable for	Ex	Description	Operating temperature	Item no.
	ELTF-PT.15	All		Pt100, 3-wire, 5x50 mm, PTFE 3.0 m, IP67	-50 °C to + 260 °C	0650070
	ELTF-PT.3	ELKM-A, -AS, AE		Pt100, 2-wire, 5 x 50 mm, 3 m PTFE cable	-50°C up to +260°C	0650003
	ELTF-PT.3.1	All		Pt100, 3-wire, 5 x 50 mm, 3 m PFA cable	-50°C up to +250°C	0650002
	ELTF-PT.61	All		Pt100, 2-wire, measuring sleeve3 x 200 mm, 5m PTFE cable, IP 65	-50 °C to + 500°C	0650040
	ELTF-Te.41	All		Thermocouple NiCr-Ni (type K); outer jacket material diameter 1.5 x 400 mm, 5 m	-17 °C to + 900 °C	0670019
	ELTF-PTEx.2	Ex only	●	Pt100, 4-wire, 3 m PTFE cable	-45°C up to +235°C	0X70002
	ELTF-PTEx.4	Ex only	●	2x Pt100, 3-wire, 3 m connection	-45°C up to +235°C	0X70030

Accessories
Serial Resistance Heating Cable System

Junction Boxes

	Type	Suitable for	Ex	Description	Ambient temperature	Item no.
	ELAK-2	**ELKM-A, -AS, -AE, -AG-L**		104 x 104 x 70 mm, polycarbonate, IP 66, up to 3 heating cables, Screw connection 1x M25, Knockout 7x M20/M25	-25 °C to + 70 °C	0920030
	ELAK-5	**ELKM-AG-L**		122 x 120 x 90 mm, polyester, IP 66, Up to 2 heating cables, screw connection 3x M25	-70 °C to + 130 °C	0920013
	ELAK-5.1			130 x 130 x 75 mm, polycarbonate, IP 66, up to 3 heating cables, Knockout 9x M20/M25	-35 °C to + 80 °C	0920002
	ELAK-5.8	**All Pt 100 temperature tracers**		122 x 120 x 90 mm, polyester, grey, IP 65, up to 2 heating cables, screw connection 2x M25 1x M16,k borehole 1x M16	-70 °C to + 130 °C	0920015
	ELAK-R-1	**ELKM-AG-N, AG-L**		Ø 150 mm, height 125 mm, thermoplastic, for star point	-45 °C to + 50 °C	0920051
	ELAK-R-2	**ELKM-AG-N, AG-L**		Ø 150 mm, height 125 mm, thermoplastic	-45 °C to + 50 °C	0920052
	ELAK-R-8			Ø 150 mm, height 125 mm, for 1 to 2 Pt100s, 2-4 wires, up to 2 sensor connections max. 2.5 mm²	-45 °C to + 50 °C	0920058
	ELAK-RS-Pt	**All Pt 100 temperature tracers**		incl. mounting base, Ø 150 mm, Height 125 mm, thermoplastic, connection of 1 double Pt100, 1 sensor line, insulation thickness max. 100 mm	-45 °C to + 50 °C	0920060
	ELAK-Ex-2.00	**ELKM-AG-N, AG-L**	●	110 x 75 x 57 mm, polyester, IP66, 1 heating cable, 1 supply line	-40 °C to 50/55/60 °C	0X85200
	ELAK-Ex-4.11	**ELKM-AG-N, AG-L**	●	122 x 120 x 90 mm, polyester, IP66, 1 heating cable, 1 supply line	-40 °C to 50/55/60 °C	0X85411
	ELAK-Ex-4.12	**ELKM-AG-N, AG-L**	●	122 x 120 x 90 mm, polyester, IP66, 2 heating cables, 1 supply line	-40 °C to 50/55/60 °C	0X85412
	ELAK-Ex-4.13	**ELKM-AG-N, AG-L**	●	122 x 120 x 90 mm, polyester, IP66, 3 heating cables, 1 supply line	-40 °C to 50/55/60 °C	0X85413

Junction Boxes

	Type	Suitable for		Description	Ambient temperature	Item no.
	ELAK-Ex-R1	**ELKM-AG, -AG-E**	●	Ø 150 mm, height 125 mm, polyamide, for star point, Ex e	-40 °C to + 50 °C	0X80071
	ELAK-Ex-R2	**ELKM-AG, -AG-E**	●	Ø 150 mm, height 125 mm, polyamide, Ex e	-40 °C to + 50 °C	0X80072
	ELAK-Ex-R4	**ELKM-AG-N + EL-CT**	●	Ø 150 mm, height 125 mm, polyamide, Ex e	-40 °C to + 50 °C	0X80074
	ELAK-Ex-R8	**All Pt 100 temperature tracers**	●	Ø 150 x 125 mm, 1-2 Pt100, max. 2.5 mm², IP 65, Screw connection 1x M25 1x M16, Borehole 2x M16 1x M20	-40 °C to + 50 °C	0X80078

Accessories
Serial Resistance Heating Cable System

Temperature-Resistant Connection Cables

	Type	Suitable for	Ex	Description	Item no.
	ELVB-OT			Connection cable 3G1.5, fluoropolymer, stranded wires: grn./yel., brown, blue	2255503016
	ELVB-OS			Connection cable 3G1.5, silicone, red, stranded wires: grn./yel., brown, blue	2253330150
	ELVB-L01			Connection cable 1.5 mm², glass-insulated, max. operating temperature 450 °C, briefly 550 °C	2216301500
	ELVB-L02			Connection cable 2.5 mm², glass-insulated, max. operating temperature 450 °C, briefly 550 °C	2216302500
	ELKM-AG-L 7.2	**ELKM-AG-L**		Can be used as connection cable 2.5 mm²	01TT007E
	ELKM-AG-L 11.7	**ELKM-AG-L**		Can be used as connection cable 1.5 mm²	01TT011E
	ELKM-AG 11.7	**ELKM-AG**	●	Can be used as connection cable 1.5 mm²	01GA011E
	ELKM-AG-N 7.2	**ELKM-AG -E, -AG-N**	●	Can be used as connection cable 2.5 mm²	01TA007E
	ELKM-AG-N 11.7	**ELKM-AG -E, -AG-N**	●	Can be used as connection cable 1.5 mm²	01TA011E

NOTES

Sample illustration
Serial Resistance Heating Cables

in the Ex area

A	**Heating cable**	ELKM-...
B	**Connecting sleeve**	Ex-Con
C	**Assembly accessories for pipelines**	ELMW-...
D	**Fastenings, self-adhesive Tapes, foils**	ELB-...
E	**Insulation bushing**	ELISD-...
F	**Warning sign**	EL-WS...
G	**Temperature controller**	Ex-box, Ex-TC
H	**Temperature tracer**	ELTF-PTEx

in the non-Ex area

A	**Heating cable**	ELKM-...
B	**Connecting set**	ELVB-...
C	**Assembly accessories for pipelines**	ELMW-...
D	**Fastenings, self-adhesive Tapes, foils**	ELB-...
E	**Insulation bushing**	ELISD-...
F	**Warning sign**	EL-WS...
G	**Temperature controller**	ELTC
H	**Temperature tracer**	ELTF-...

This is simply an overview drawing, not installation instructions.
For detailed information please contact our technicians.

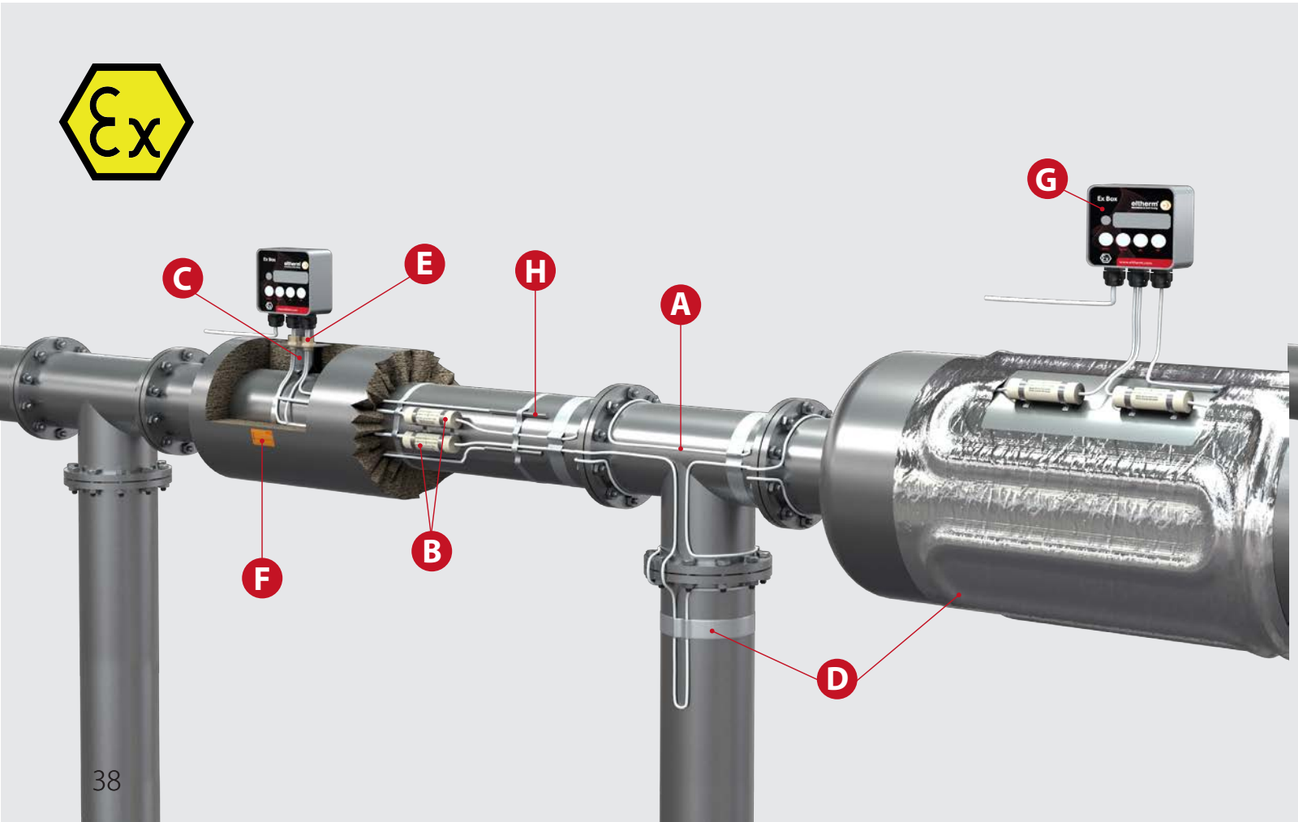

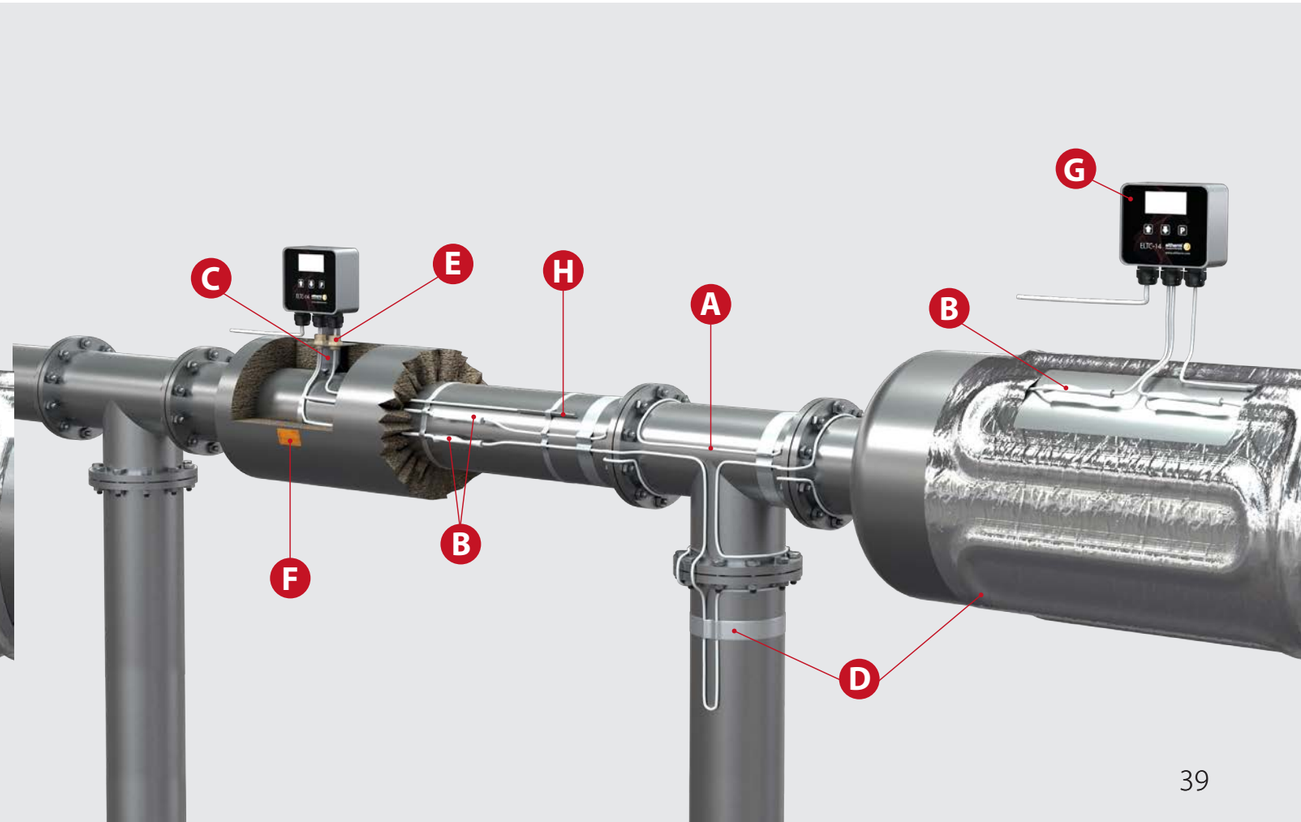

Survey

Electrical Trace Heating on Pipelines

eltherm®

Customer Information

Company*		**Contact person***	
Street, postal code, city		**E-mail***	
Website		**Telephone***	

Project Information

Application	☐ Frost protection ☐ Temperature maintenance ☐ Heating and temperature maintenance
Power supply voltage*	
Holding temperature*	°C
Product temperature	°C
Min. ambient temperature*	°C
Max. ambient temperature*	°C
Removable heating	☐ Yes (drawing required) ☐ No
Manufacturing according to	☐ Provision ☐ Drawing

Pipeline Details

Length	mm
Nominal width/outside-ø	mm
Material	
**Specific thermal capacity of the raw material ** **	kj/kg*K
**Density of the raw material ** **	kg/m³
Pipe weight per metre	kg/m
**Wall thickness ** **	mm
Quantity	Valves: Flanges: Supports: Pumps/filters: T-branches:
Location	☐ Inside ☐ Outside
Does moisture have to be taken into account?	☐ Yes ☐ No

Heat Insulation Details

Material	
Thickness*	mm
Thermal conductivity	W/(m-K)
Density	kg/m³
Upper temperature limit value of the heat insulation	°C

Process Data

**Product ** **	
**Density ** **	kg/m³
Specific thermal capacity	kj/kg*K
**Specific melting heat ** **	J/kg
Phase transition temperature (if applicable) **	°C
Switch-on temperature	°C
**Starting temperature ** **	°C
**Ending temperature ** **	°C
Max. operating temperature (trace heating turned on)	°C
Max. brief pipe temperature e.g. during steam purging (trace heating turned off)	°C
**Desired heating up time ** **	h

Control Details

Control	☐ Provided by customer ☐ Capillary tube controller ☐ Complete switch cabinet ☐ Pluggable ☐ Electronic controller
Sensor (electronic controller)	☐ NiCrNi ☐ FeCuNi ☐ Pt-100 ☐ 2-wire ☐ 3-wire ☐ 4-wire
Assembly (electronic controller)	☐ Top hat rail ☐ Wall mounting ☐ Door installation ☐ Mounting bracket / pipe mounting

Potentially Explosive Atmosphere

Installation in the Ex area	☐ Yes ☐ No EX zone:
Temperature class	☐ T1 ☐ T2 ☐ T3 ☐ T4 ☐ T5 ☐ T6
Certification according to	

Information about Assembly

Assembly by eltherm	☐ Yes ☐ No
Assembly location	

*** Please fill in all mandatory fields**

**** Only needs to be indicated for heating**

Please enclose technical drawings as attachments!

Use the interactive form on our website.

NOTES

We are there for you
eltherm worldwide

Your eltherm contact person

eltherm GmbH
Headquarters
Ernst-Heinkel-Strasse 6 - 10
57299 Burbach. Germany

P.: +49 2736 4413-0
F.: +49 2736 4413-50
info@eltherm.com

861210001 - GB - 04/2022 - PDF - Subject to change without notice